add-on Camera to Autocage

Part List:

Vender	Part #	Description	Unit Price
Amazon	R2-4K PRO	ROVE R2-4K PRO Dash Cam, Supports 512GB Max	$129.99
Amazon	MB-MD512SA/AM	SAMSUNG PRO Plus microSD Memory Card + Adapter, 512GB	$49.99
Amazon	UTC1211USP-WH	Amazon Basics 12W One Port USB-A Wall Charger (2.4A) Pack of 2	$5.1
ThorLabs	FGB25	Ø25 mm BG3 Colored Glass Bandpass Filter, 315 - 445 nm and 715 - 1095 nm	$40.70
ThorLabs	LA1134	N-BK7 Plano-Convex Lens, Ø1", f = 60 mm, Uncoated	$24.43
ThorLabs	SM1L03	SM1 Lens Tube, 0.30" Thread Depth, One Retaining Ring Included	$13.15
DigiKey	365-1056-ND	EMITTER IR 890NM 150MA T 1 3/4	$1.13
DigiKey	CF14JT39R0CT-ND	RES 39 OHM 5% 1/4W AXIAL	$0.04
		Total	**$264.93**

Hardware Setup

- **Camera Setup**:
  - Get a ROVE R2-4K PRO dash cam.
  - Mount a lens (f=60mm) with a filter to the camera. The filter is for filtering out the masking LED light (RED).
  - Insert a SAMSUNG 512G microSD memory card.
  - Power on the dash cam.
  - Follow the user manual to setup the camera settings via Setting Menu. You can do the settings either on the camera screen directly, or on your smartphone by connecting to the dash cam Wi-Fi and using ROVE APP.
  - Key settings:
    - Video Resolution: 1080P 1920x1080 @30FPS. (with 512G SD Card, you can get about 5 days' data).
    - Loop Recording: 1-Min,3-Min, 5Min or 10 Min.

- **IR Illuminator**
  - Get an Infrared Emitter and a 39 Ohm resistor.
  - Assemble and connect the IR Illuminator to the existing Arduino DUE board (wave) as shown in the diagram.

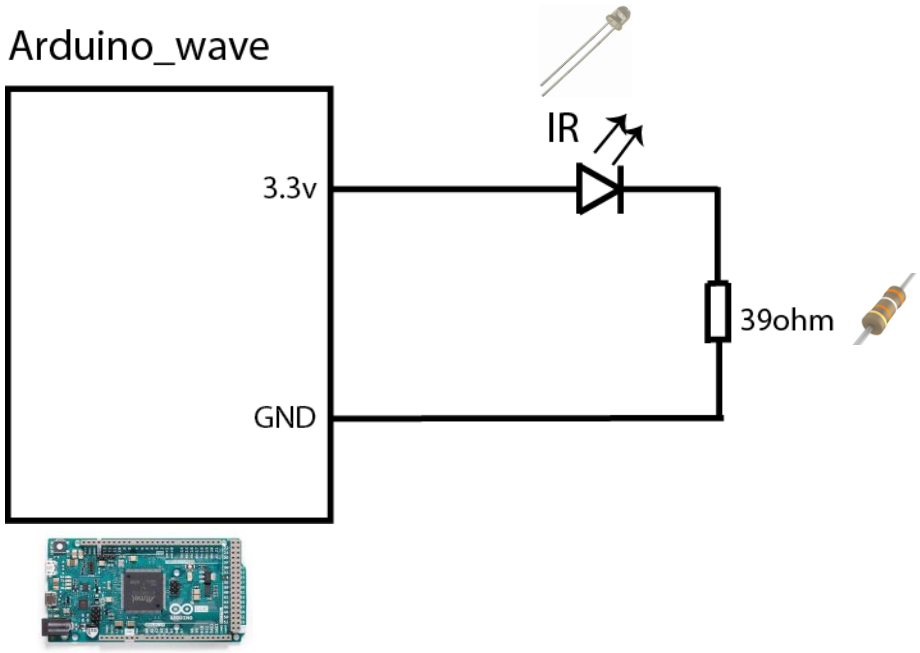

Add-on Camera layout inside Autocage

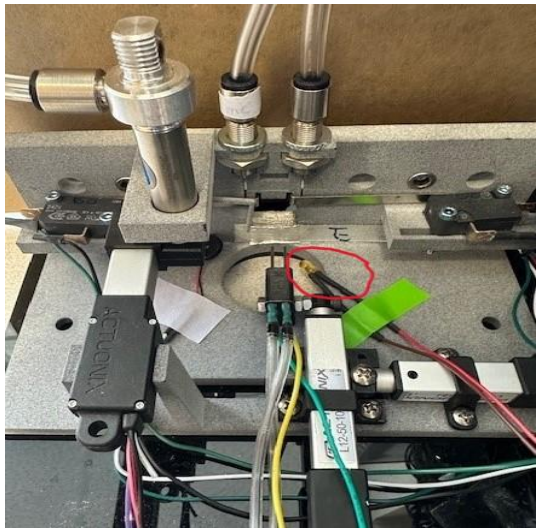

IR Illuminator

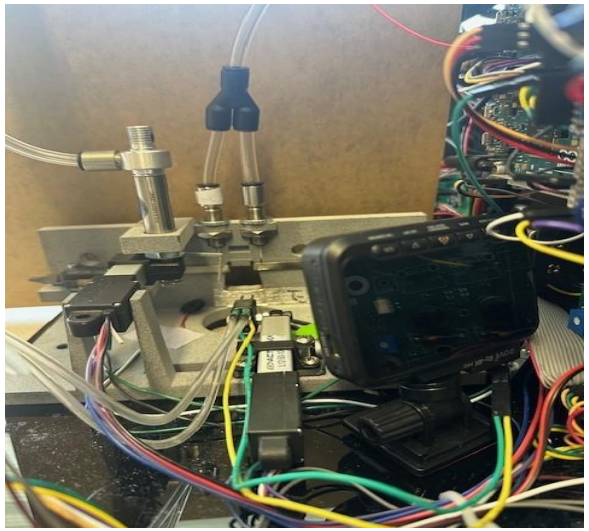

Front view

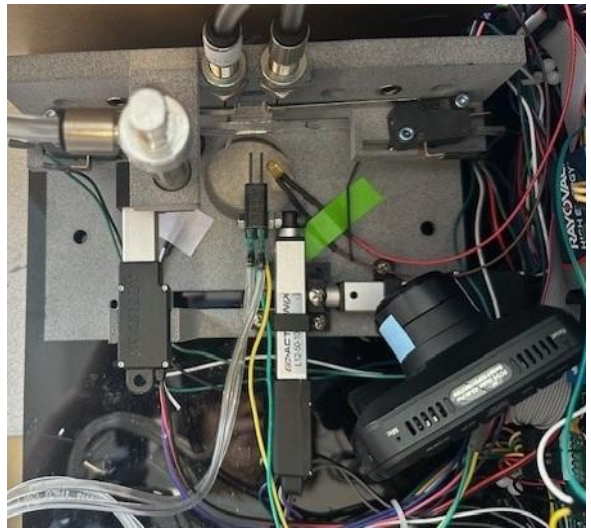

Top view

Side view
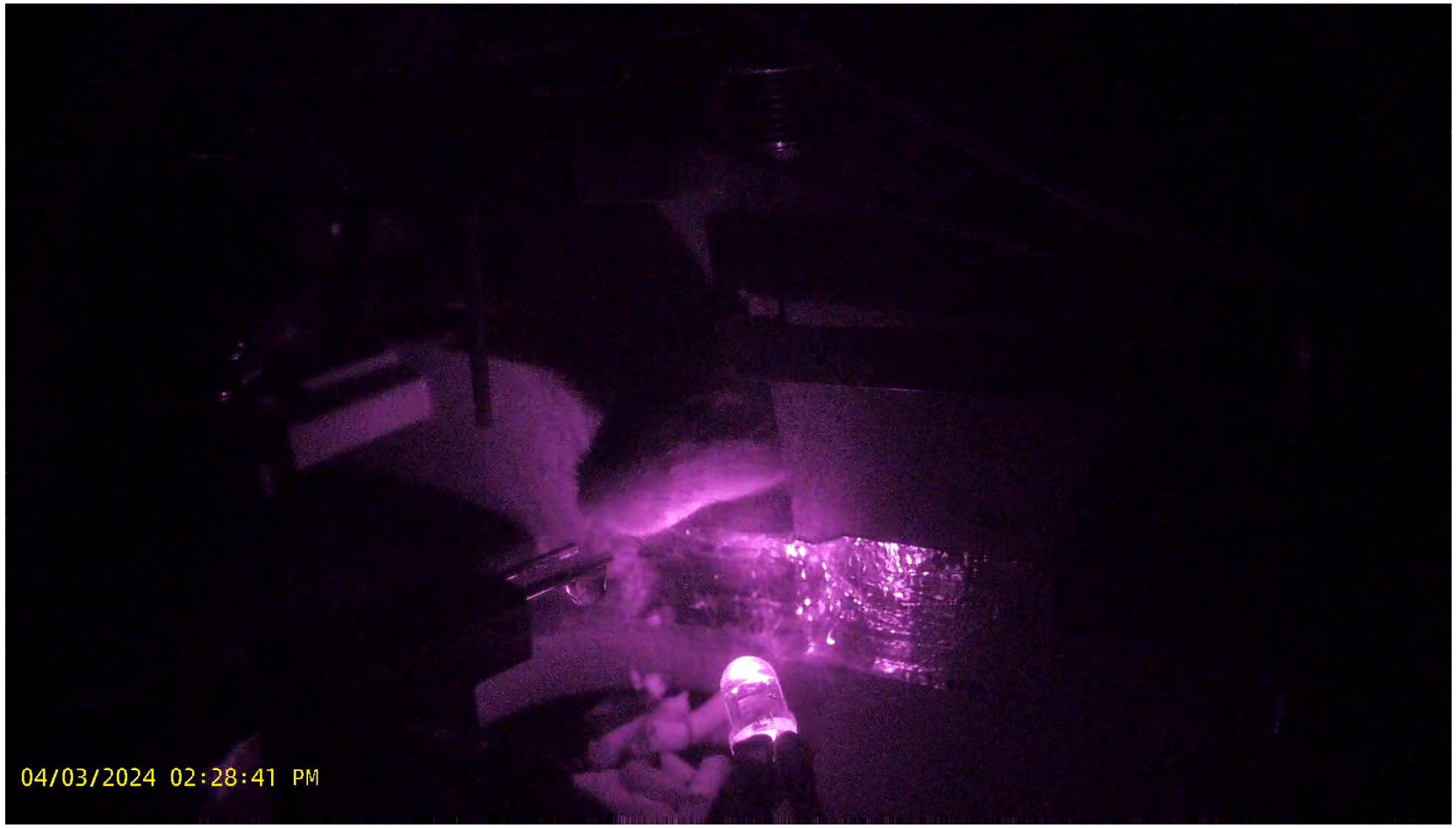
Video Example